COIL FORMER
General data 10-pins EPC17 coil former

PARAMETER	SPECIFICATION
Coil former material	phenolformaldehyde (PF), glass-reinforced, flame retardant in accordance with “UL 94V-0”; UL file number E59481
Pin material	copper-tin alloy (CuSn), tin (Sn) plated
Maximum operating temperature	180°C, “IEC 60085”, class H
Resistance to soldering heat	“IEC 60068-2-20”, Part 2, Test Tb, method 1B, 350 °C, 3.5 s
Soldeerability	“IEC 60068-2-20”, Part 2, Test Ta, method 1

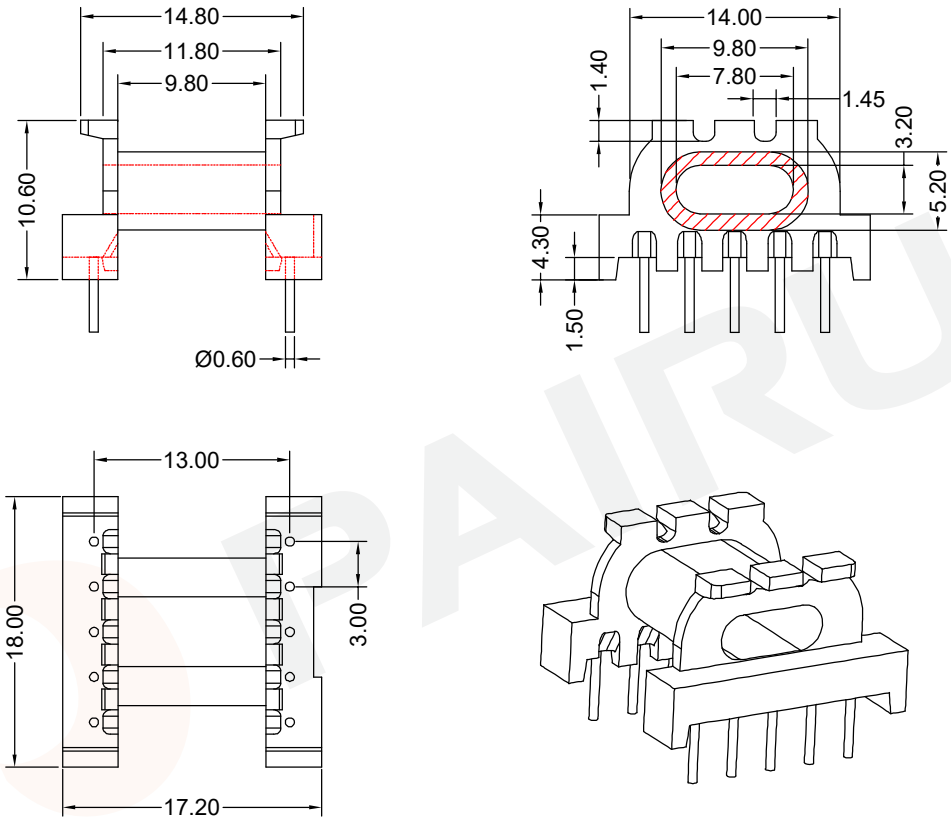

Winding data and area product for 10-pins EPC17 coil former

NUMBER OF SECTIONS	WINDING AREA (mm^2)	MINIMUM WINDING WIDTH (mm)	AVERAGE LENGTH OF TURN (mm)	AREA PRODUCT Ae x Aw (mm^4)	TYPE NUMBER
1	22	9.80	38	640	EPC-1702-1S-10P

Tolerances unless otherwise specified:
0<L≤4±0.10 4<L≤16±0.20
16<L≤45±0.30 45≤L±0.40
Pin Dim:±0.05 Thickness:±0.20 Pin Pitch:±0.20

Dimensions: (mm)

REMARK	
Mould No.:	Bobbin material: T378J
Code No.: FAY01216	Available for Fuan core: EPC17

PAIRUI
Fuan Electronics
TEL :0086-514-87693589
EML :sales@fuantronics.net
WEB:www.fuantronics.net

Make: P.Xiao	Material Number: A45170600058
Checked: Beson. zhan	Document/Rev: 00
Approved: Anson. zhan	Date of Recognition: Dec./02/2019