# P/N: FAPL10VL-392Y1R3

RoHS

PAIRUI
www.fuantronics.net

## Outline Dimensions(Unit:mm)

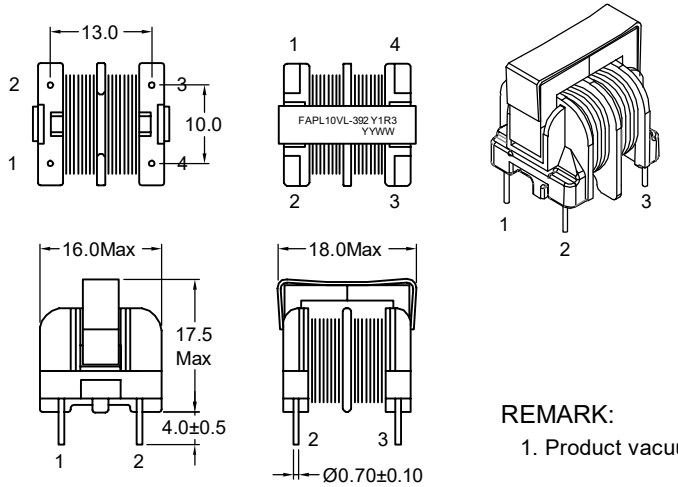


REMARK:

1. Product vacuum impregnation.

## Electrical Characteristics

Inductance : 3.9mH Min,at 10KHz,0.1V.
Rated current : 1.3Amps.
D.C.Resistance : 0.25 ohms Max.
Turns Ratio : Wdg1:Wdg2=1:1±1%,at 20KHz,1V.
Hipot : Coil-Coil : 1500VAC/3mA/2S.

## General Properties:

Operating Temperature:-40°C to +125°C
(Temperature rise included).
Storage Temperature:-25°C to +85°C.
Storage Humidity:RH10%~70%.
Weight: ≈9.0g

## Electronical Schematic

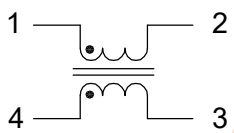


"•" Polarity point

## Current VS Temp.(Simulation test).

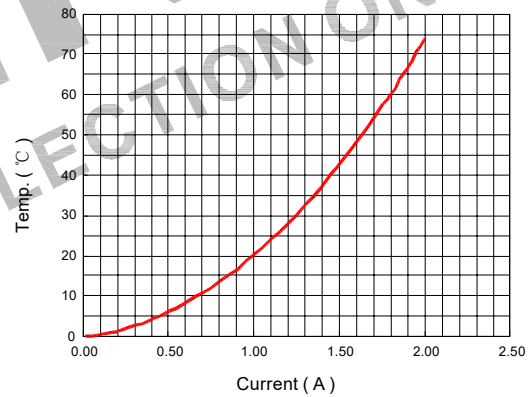


## Winding Construction:

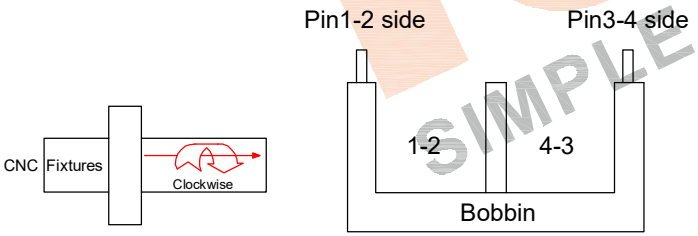


## List of UL Certificate:

| No. | Part Name | Mat'l Description | Supplier | UL Number |
|---|---|---|---|---|
| 1 | Bobbin | UU-1051-1/T375J | Chang Chun Plastics Co Ltd | E59481 |
| 2 | Copper wire | 2UEW-F/155C | Dong Guan YiDa Industrial Co Ltd | E344055 |
| 3 | Core | UU10.5-H10K | Fuan | N/A |
| 4 | Clip | UU10.5/SUS301 | Chuangshun Hardware Electronic Factory | N/A |
| 5 | Varnish | T-4260(a)/MW80-C | SuZhou TaiHu Electric Advanced Material Co Ltd | E228349 |

PAIRUI
SIMPLE SPEC FOR SELECTION ONLY

| REV | DESCRIPTION | APPD | DATE |
|---|---|---|---|

Tianchang Fuan Electronic Co Ltd
www.fuantronics.net
TEL: +86-550-7814888
FAX:+86-550-7831133

Tolerances unless otherwise specified:
(.X)±0.50 (.XX)±0.25
Unit of measurement: mm

Make: Jinze
Checked: BenSon
Approved: AnSon

**DRAWING TITLE**
UU10.5 COMMON-CODE
FILTER INDUCTOR

Material Number: A24PL10XA370

Customer P/N:
Document/Rev: 2201075/00
Specification Sheet: 1 of 1
Date of Recognition: Jan./02/2021