P/N: FAPL10VL-563Y0R35

RoHS

PAIRUI
www.fuantronics.net

Outline Dimensions(Unit:mm)

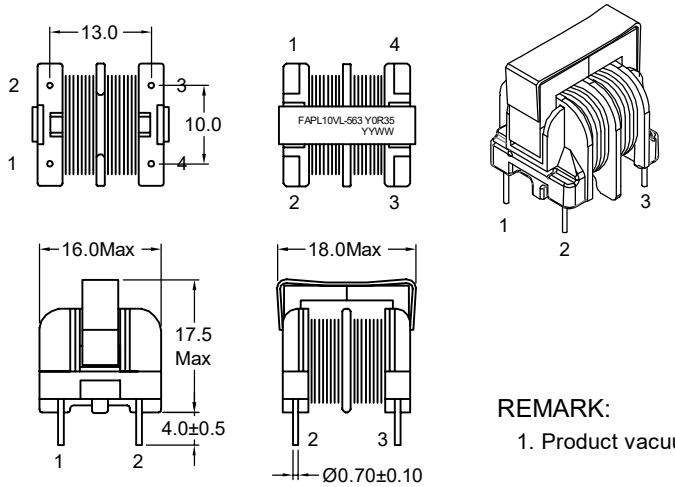

REMARK:

1. Product vacuum impregnation.

Electrical Characteristics

Inductance : 56.0mH Min,at 10KHz,0.1V.
Rated current : 0.35Amps.
D.C.Resistance : 3.3 ohms Max.
Turns Ratio : Wdg1:Wdg2=1:1±1%,at 20KHz,1V.
Hipot : Coil-Coil : 1500VAC/3mA/2S.

General Properties:

Operating Temperature:-40°C to +125°C
(Temperature rise included).
Storage Temperature:-25°C to +85°C.
Storage Humidity:RH10%~70%.
Weight: ≈9.0g

Electronical Schematic

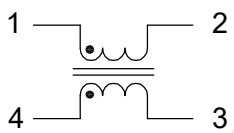

"•" Polarity point

Current VS Temp.(Simulation test).

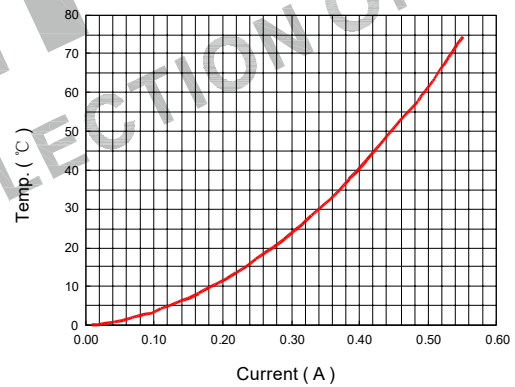

Winding Construction:

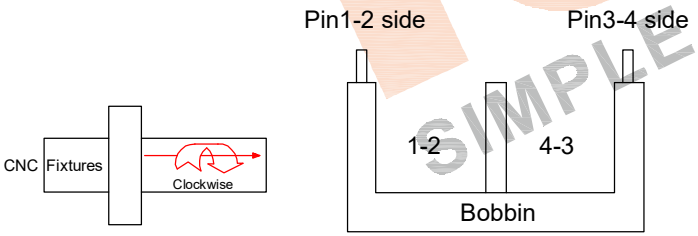

List of UL Certificate:

No.	Part Name	Mat'l Description	Supplier	UL Number
1	Bobbin	UU-1051-1/T375J	Chang Chun Plastics Co Ltd	E59481
2	Copper wire	2UEW-F/155C	Dong Guan YiDa Industrial Co Ltd	E344055
3	Core	UU10.5-H10K	Fuan	N/A
4	Clip	UU10.5/SUS301	Chuangshun Hardware Electronic Factory	N/A
5	Varnish	T-4260(a)/MW80-C	SuZhou TaiHu Electric Advanced Material Co Ltd	E228349

PAIRUI SIMPLE SPEC FOR SELECTION ONLY

REV	DESCRIPTION	APPD	DATE

Tianchang Fuan Electronic Co Ltd
www.fuantronics.net
TEL: +86-550-7814888
FAX:+86-550-7831133

Tolerances unless otherwise specified:
(.X)±0.50 (.XX)±0.25
Unit of measurement: mm

Make: Jinze
Checked: BenSon
Approved: AnSon

DRAWING TITLE
UU10.5 COMMON-CODE
FILTER INDUCTOR

Material Number: A24PL10XA170

Customer P/N:
Document/Rev: 2201045/00
Specification Sheet: 1 of 1
Date of Recognition: Jan./02/2021